ΕΚΕΦΕ «Δημόκριτος»
Ινστιτούτο Πληροφορικής & Τηλεπικοινωνιών

Bridging self-regulation and content-filtering

Internet Content Filtering Group
Software and Knowledge Engineering Lab
http://www.iit.demokritos.gr/skel/i-config/

Research activities of *i-config*

- Language Technology
- Image Understanding
- Knowledge Discovery in Data
- User Modeling
- Multimedia Information Processing

Core technologies and applications

- Technologies:
  - Information extraction
  - Information filtering
- Filter generator:
  - Web filtering
  - Spam filtering (e-mail)
  - Classifying financial news

Filtering digital content

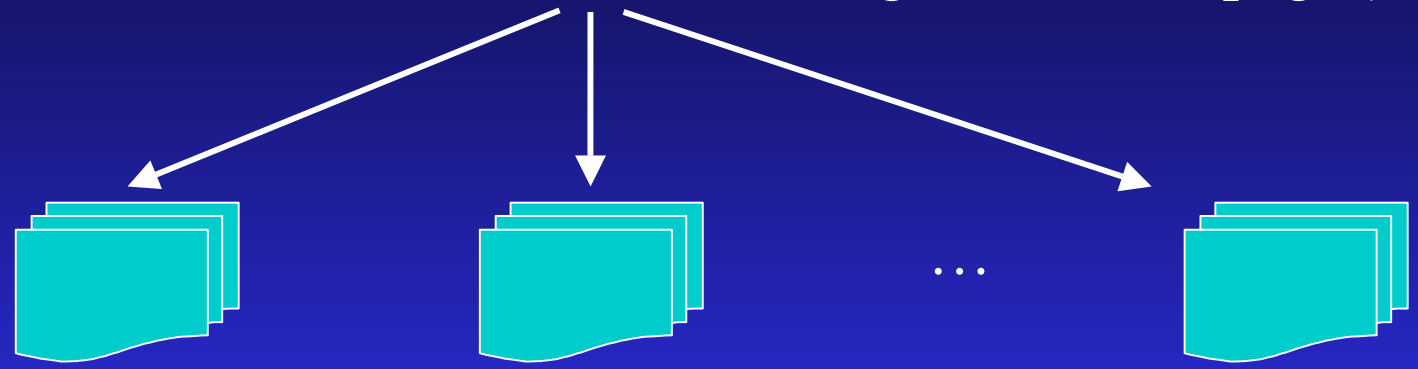

Internet Content

- ~98% “safe”
- Uncontrolled
- Total and direct access
- Lack of provenance (relative to absolute)
- High volatility

Unsafe content

- Illegal
  - Pedophiles, Nazism (DE)
- Offensive
  - Pornography, Racism, Violence
- Undesired
  - Online gambling
  - Day trading sites

Where and how to filter

- Self-regulation
- Filtering at the source
- Filtering during distribution
- Filtering at the last mile

Self-regulation

- Self-labeling by content authors – producers
- Browsers block according to user settings

ICRA v.1.0/RSACi : (n 3 s 4 v 0 l 4)

New, more expressive vocabulary incl. context : ICRA v. 2.0 (http://www.icra.org/faq/decode/)

Filtering at the source – distribution

- Literally impossible due to network structure, lack of provenance and routing method (cf. legal case against Yahoo! France)

Filtering at the last-mile (‘consumer’)

- List-based solutions
  - underblocking
- Shallow keyword matching solutions
  - overblocking

FilterX: Web page filtering

FilterX is a Web proxy server that filters pornographic content on the Web. Having been trained with suitable examples, FilterX operates in real time.

- Combining *natural language processing image analysis and Web structure*, *FilterX* analyses all the information available on the HTTP stream, not just the URL or title.

• Using *machine learning*, FilterX considers the actual contribution of textual, structural and pictorial features.

•Creating a *multimedia representation model*, for each document FilterX achieves practically zero overblocking.

Last-mile applications of FilterX

- Self-regulation and filters
  - SIFT: Use of filters when self- or 3rd party labeling absent / not trusted – resulted in ***ICRAplus***, a free platform bridging self-regulation with filtering software
- Protection of young students
  - SCOFI: Different content access according to student age via smartcard

ICRAplus

- Communication through W3C standards (HTTP, Label Bureau)
- Easy to implement public API
- Literally ANY filter can become module
- High security - DSig
- Will run on Win OS
- http://www.icra.org/icraplus/

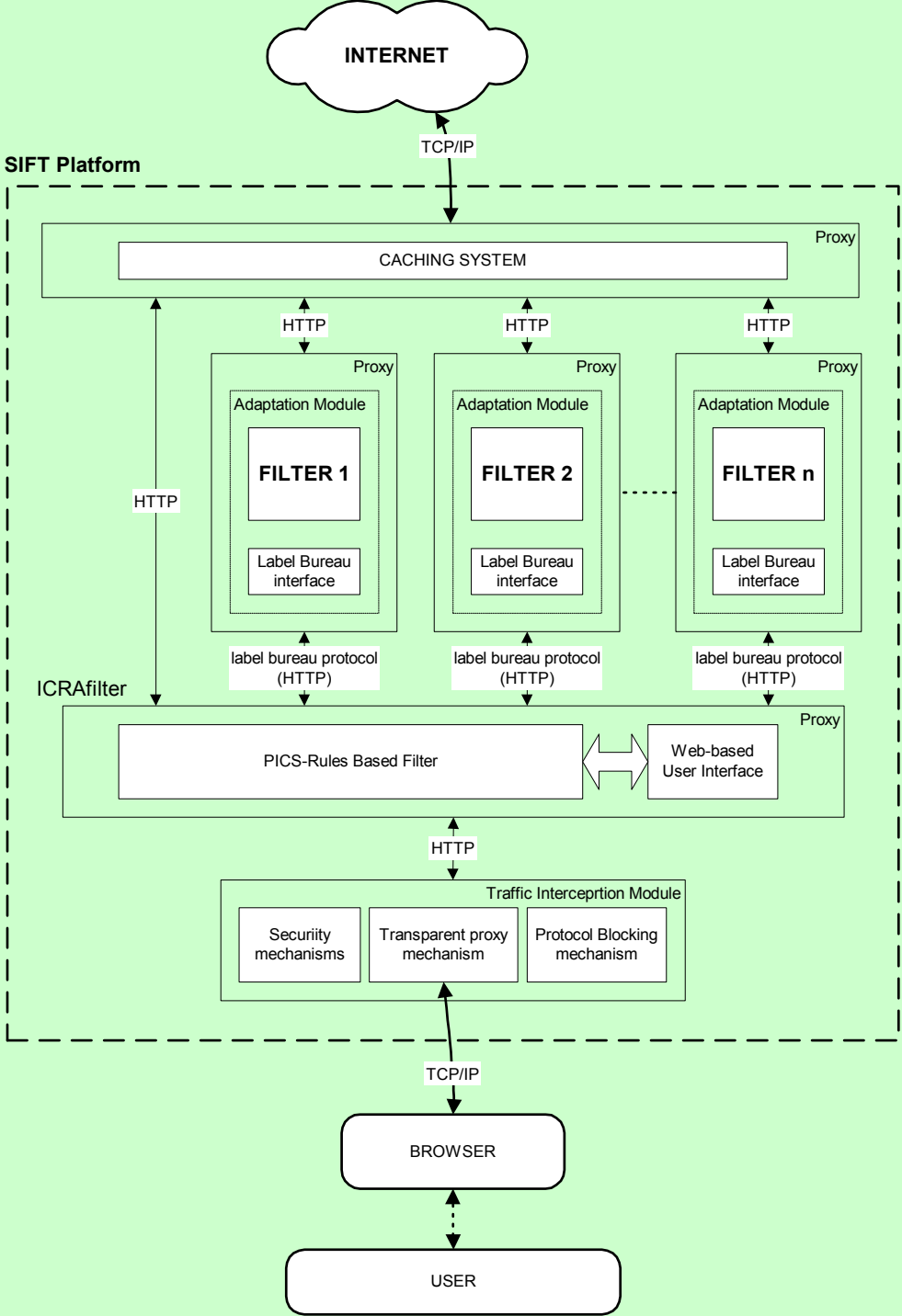

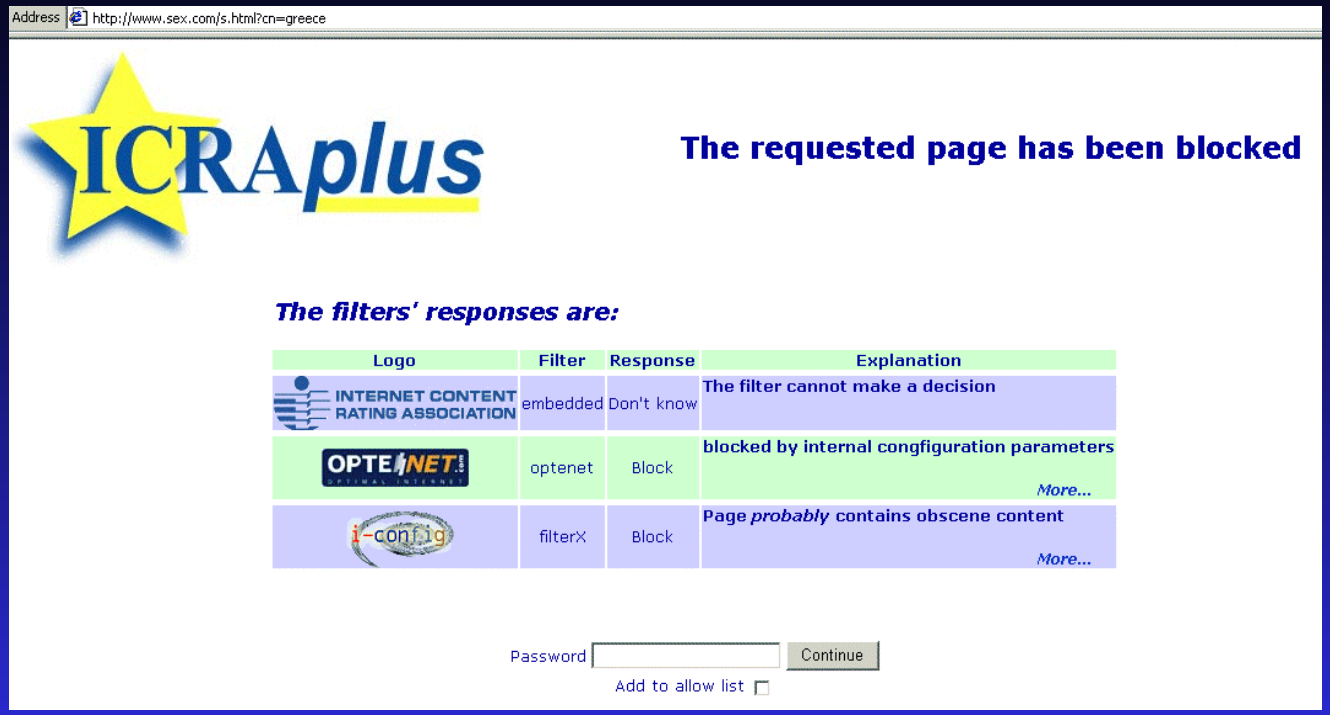

- In the absence of author-provided ICRA labels, the requested page can still be blocked by co-operating filters
- Public API can help filter vendors wrap their existing software into an ICRAplus module in no time.
- Users can override blocks temporarily or permanently

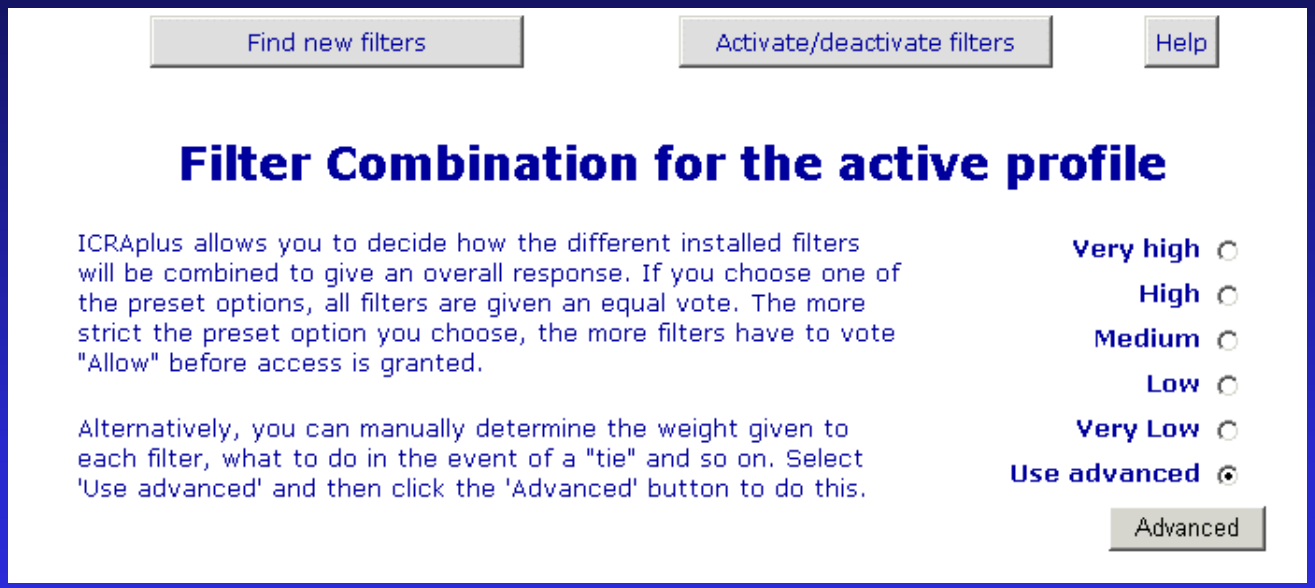

- Filters can be combined per user profile in either a simple manner, with predetermined, factory settings
- or….

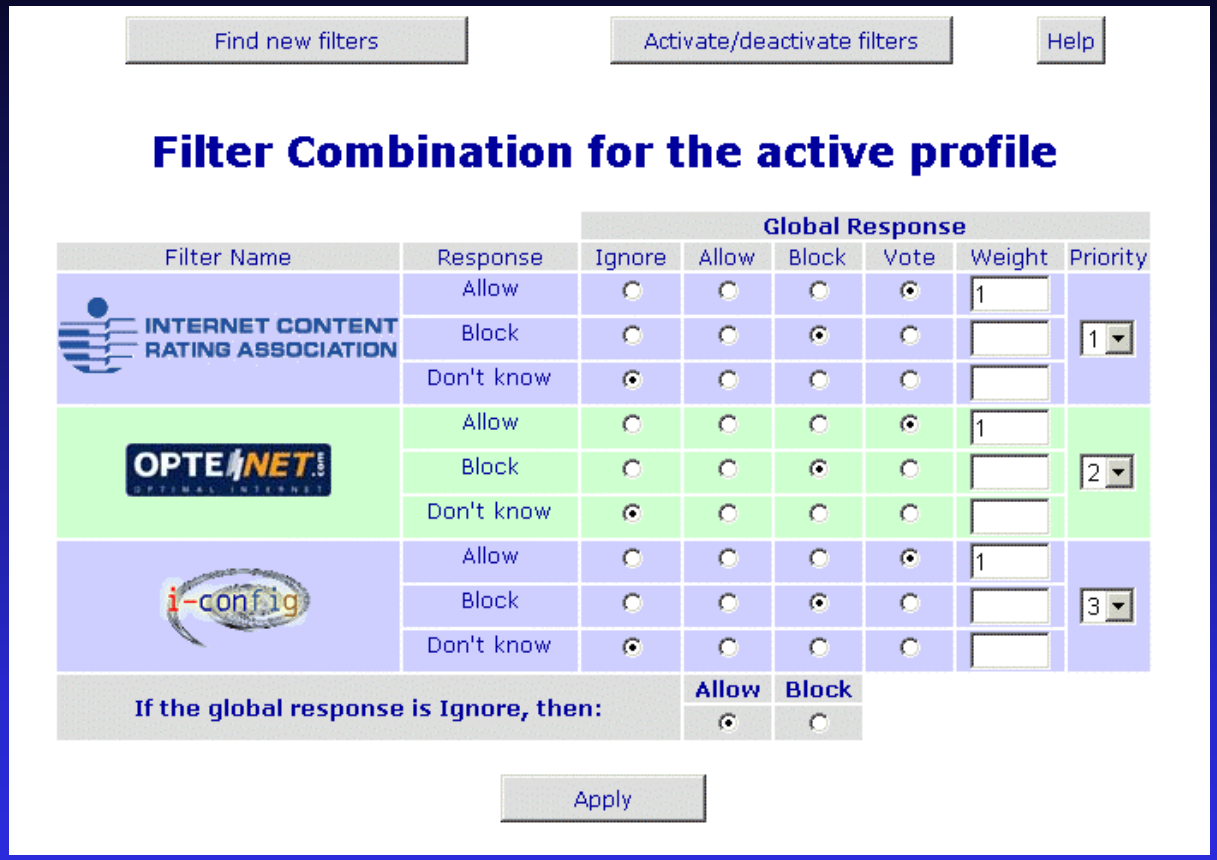

- ..users can have full control on the filtering procedure, incl. filter priority, filter weights and tie resolution!
- More info and downloads at http://www.icra.org/icraplus/

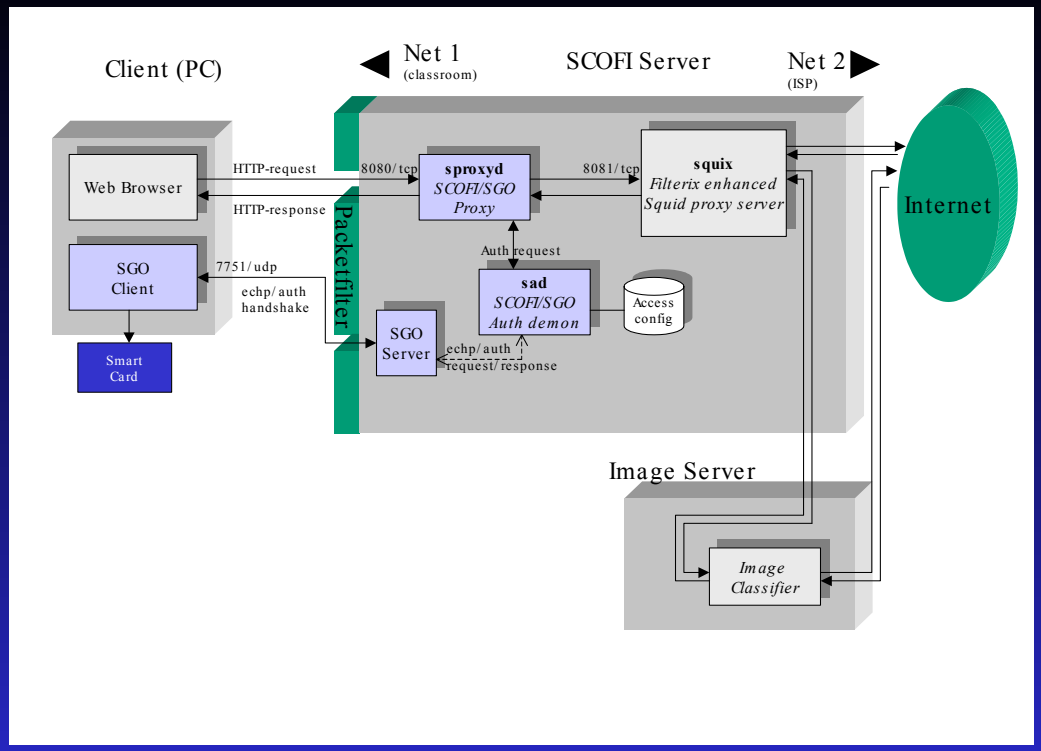

- SmartCard based authentication and age profile
- Different levels of filtering
- High security - Dsig
- External image analysis

FilterX revisited

- Trained on self-proclaimed porn sites
- Creation of page-level representation (multimedia and structural)
- Turn “noise” to our advantage by using it as feature
- Models per language + language identifier
- Evaluated using multi-fold cross-validation (before SIFT & SCOFI)
- Can pass the decision to the user for thresholding

FilterX Results

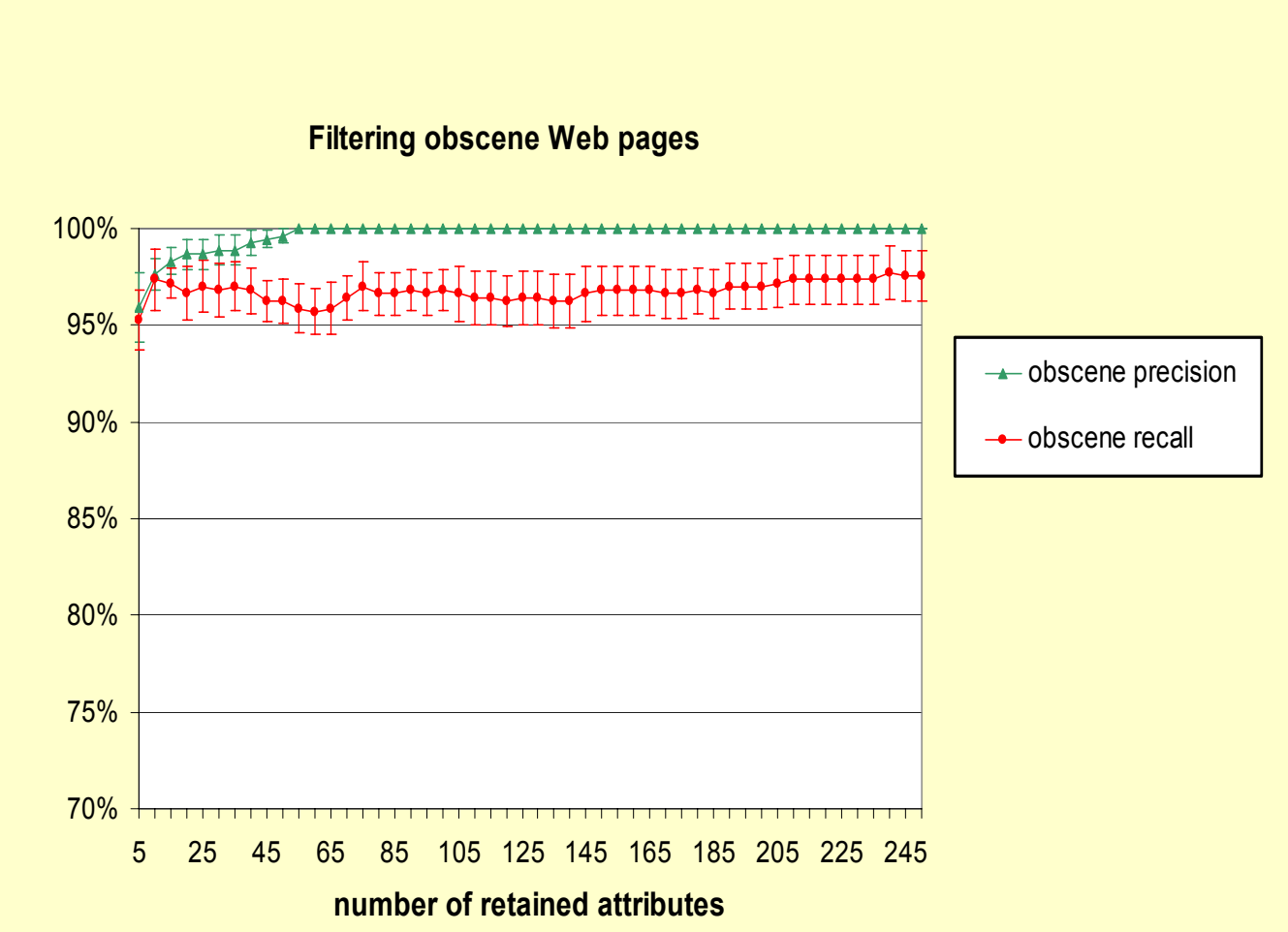

A case for email

- Instead of learning what is spam, learn what is legit
- User profile/model based on user's Inbox + spam
- Turn "noise" to our advantage by using it as feature
- Models per language + language identifier
- Evaluated in house + multi-fold cross-validation

Spam filter results

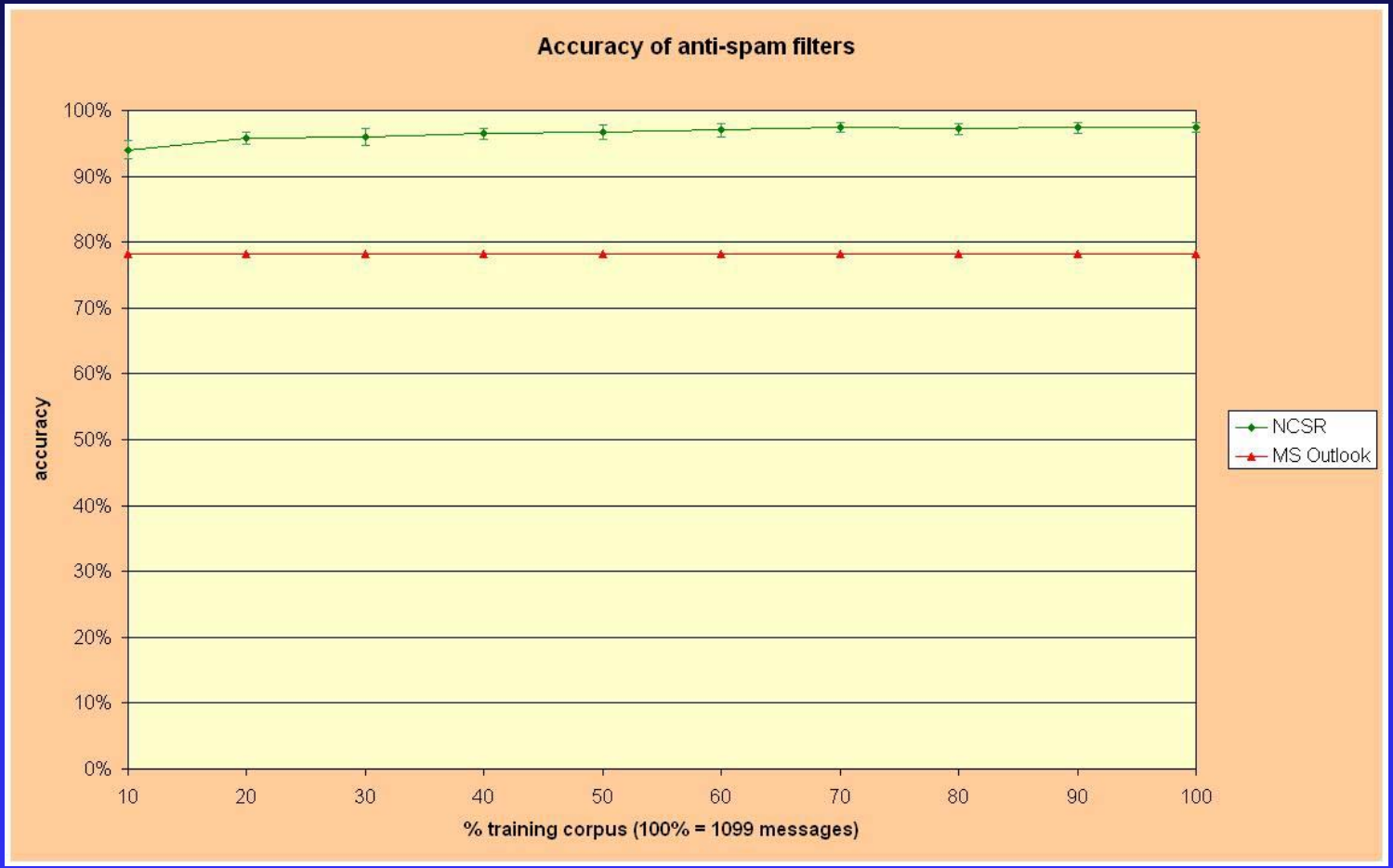

Food for thought

- Decide where to put the bias: overblocking vs. underblocking
- Most of the harmful content *wants* to be found
- Possibility of "hostile" users! (enforced s/w!)
- Very hard to detect *intention* of the content author
- Reverse the problem of filtering by centering on the effect on the user
- Technology only to solve problems it has created!

More info

Konstantinos Chandrinos

kostel@iit.demokritos.gr

Internet Content Filtering Group (i-config)

NCSR "Demokritos"

http://www.iit.demokritos.gr/skel/i-config/